GEM 10 (2:1)

Rated load	680 Kg
Rated speed	1 m/s
Suspension	2 : 1
Machine weight	290 Kg
Brake	Failsafe
Main Shaft load (static) max.	2400 Kg

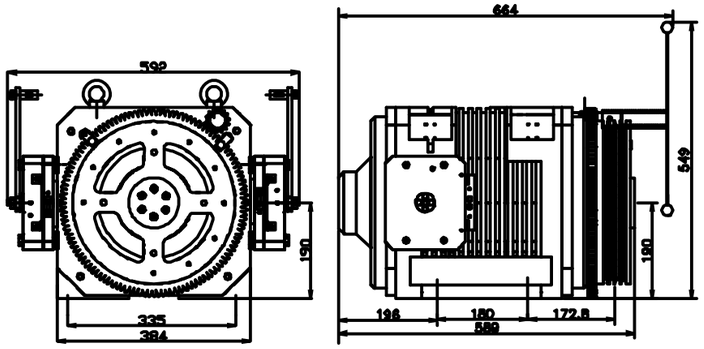

Standard Technical Specification for all Models

	GEM 6 100/0408-2S13	GEM 6 063/0408-2S13	GEM 6 063/0408-2S13	GEM 8 100/0544-2S13	GEM 8 160/0544-2S13	GEM 10 100/0680-2S13	GEM 10 160/0680-2S13
Rated load	408	408	408	544	544	680	680
Speed (r/min)	119	75	75	119	190	119	190
Rated Torque (Nm)	230	230	230	370	370	400	400
Max load (Kg)	1500	1500	1500	2400	2400		2400
Rated Power (KW)	3	2.3	3	4.6	7.4	5.2	8.5
Rated Voltage (V)	340	340	214	340	340	340	340
Rated Current (A)	7.4	4.5	7.4		17.4	12.5	20
Poles	24	24	24	24	24	24	24
Rated Frequency (Hz)	23.8	15	15	23.8	38.1	23.8	38.1
Brake Torque (N.m)	2 X 270	2 X 270	2 X 270	2 X 420	2 X 420	2 X 500	2 X 500
Sheave Diameter (mm)	320	320	320	320	320	320	320
Rope	4 X Ø 8	4 X Ø 8	4 X Ø 8	5 X Ø 8	5 X Ø 8	5 X Ø 8	5 X Ø 8
Rated Speed (m/s)	1	0.63	0.63	1	1.6	1	1.6
Protection Class	IP21	IP21	IP21	IP21	IP21	IP21	IP21
Machine Wt.	180 Kg	180 Kg	180 Kg	245 Kg	245 Kg	300 Kg	300 Kg
Max. Height	35 Met	35 Met	35 Met	75 Met	75 Met	75 Met	75 Met
Roping	2:1	2:1	2:1	2:1	2:1	2:1	2:1
Pass. Capacity	6	6	6	8	8	10	10

mark elektriks

Regd.Office & Works
Plot No: 15, Gultekdi Industrial Estate, Pune: 411037, India
Phones: 020 24268499, 24275379, Tele Fax: 020 66016311
Branches/ Associates : Ahemdabad | Delhi | Kolkatta
Email: markelektriks@vsnl.net, sales@markelektriks.com
Website: www.markelektriks.com

ASCENT

THE ENERGY SAVER

First Company to manufacture 100% indigenous Gearless Elevator Machine in India

GEARLESS MACHINE FOR PASSENGER AND FREIGHT ELEVATORS

Company Profile

Mark Elektriks has been in the business of manufacturing Special Purpose Electric motors for the last four decades and is known for its passion for innovation, kaizen & quality.

It is a leading manufacturer of Special Purpose Electric Motors in India and has been credited as a pioneer in the development Torque Motors, Stall Torque Motors, Reluctance & Permanent Magnet Synchronous Motors, AC Servo Motors, High Efficiency AC Motors, Special Tacho-generators, motors for Nuclear power plants & Special Purpose DC Motors.

The company is located in Gultekdi Industrial area, Pune and is backed by four decades of development experience and a state of the art R & D, Manufacturing and Testing facilities.

Mark Elektriks caters to a wide variety of applications across various verticals all over India to clients such as Nuclear Power Corporation of India, Reliance Industries, Steel Authority of India Limited, Sardar Sarovar Nigam (Gujarat), Alfa Laval India Limited, Rieter (India), Asean Brown Boveri and many more. Mark Elektriks is also registered with renowned Consultants like MECON and M N Dastur.

Needless to say, Mark Elektriks is a preferred vendor for the import substitutes of electric motors & has a large base of satisfied customers in private & public sectors and is also exporting to developed countries.

Continuing with the company tradition of innovation, Mark Elektriks now brings to the Indian customers a world class technology of Gearless Permanent Magnet Machines for Elevator Applications, under the "ASCENT – The Energy Saver" brand of Gearless elevator machines.

The "ASCENT – The Energy Saver" Series of Gearless Permanent Magnet Machines bring many advantages over the conventional Geared elevator machines.

Features & Benefits

This "Ascent" motor series of permanent magnet synchronous motors distinguishes itself with:

- Simple installation
- High efficiency and Energy Saving of more than 30%
- Manual brake release
- Certified brake (certification in process)
- Compact size
- Quiet and smooth operation for passenger comfort
- Maintenance free operation and Easy adjustment
- Package solution (motor + inverter)
- Forced cool arrangement can be provided (optional)
- All India sales & service network
- 100% Indigenous product

GEM 6 (2:1)

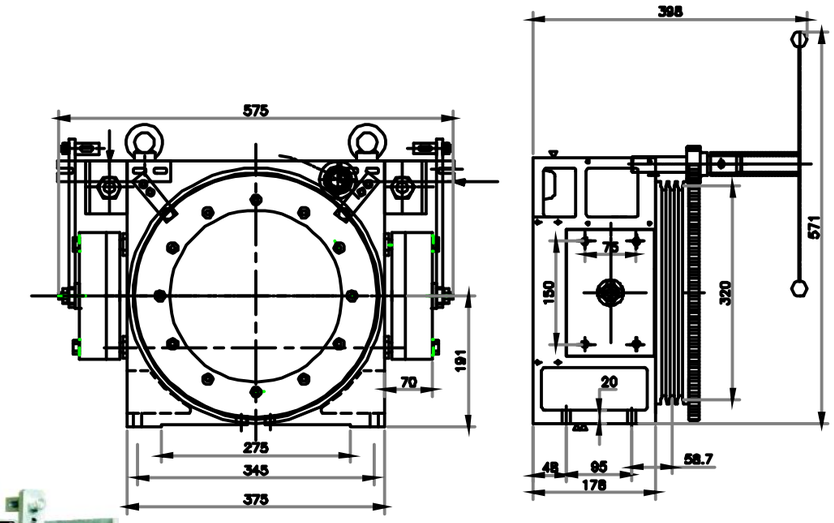

Rated load	450 Kg
Rated speed	1 m/s
Suspension	2 : 1
Machine weight	180 Kg
Brake	Failsafe
Main Shaft load (static) max.	1500 kg

GEM 8 (2:1)

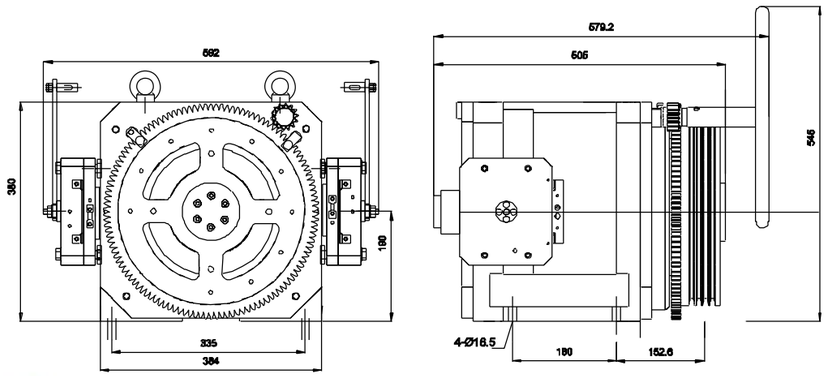

Rated load	544 Kg
Rated speed	1 m/s
Suspension	2 : 1
Machine weight	250 Kg
Brake	Failsafe
Main Shaft load (static) max.	2400 kg

ASCENT THE ENERGY SAVER